Sci. Rep. Kanazawa Univ.
Vol.48, No.1,2, p.31-42, 2004

Simultaneous *in-situ* multi-element analysis of minerals on thin section using LA-ICP-MS

Yoshito ISHIDA, Tomoaki MORISHITA, Shoji ARAI and Miki SHIRASAKA

Department of Earth Sciences, Faculty of Science, Kanazawa University, Kakuma-machi, Kanazawa 920-1192, Japan
Graduate School of Natural Science and Technology, Kanazawa University, Kanazawa 920-1192, Japan

Running title : In-situ LA-ICP-MS analysis of minerals on thin section

Abstract : *In-situ* trace-element analyses on minerals are especially useful for characterization of geological materials. We explored optimistic conditions of a inductively coupled plasma mass spectroscopy with laser-ablation sample introduction method (LA-ICP-MS) for *in-situ* quantitative trace-element analysis of geological materials on thin section. The sampling with an excimer laser with energy density of 8 J/cm^2 is appropriate for *in-situ* analysis of minerals on thin section based on ablation hole morphology. The rate of material removal is estimated from deep holes on a glass after 500 shots with energy on sample surface of 8 J/cm^2 to be approximately 0.2 μm/pulse. 150-200 shots might be available for a sample prepared as normal thin section (30 μm in thickness). All data were obtained by ablating in He gas prior to combination with the dominant Ar carrier flow because ablation in He minimized post-ablation surface condensation, resulting in high sensitivity. We examined the relationship between the size of laser-ablation hole and sensitivity of analysis in conducting *in-situ* simultaneous quantitative LA-ICP-MS analysis of 37 elements including rare earth elements (REEs). The diameter of laser beam can be as small as 30μm to obtain sufficiently good dataset for trace-element concentrations of minerals from thin section.

Introduction

The inductively coupled plasma mass spectroscopy has an advantage for timesaving analysis both for solution and solid materials. Combination with the laser-ablation sample introduction method (LA-ICP-MS) enables us to make *in-situ* trace-element analysis on small solid materials. *In-situ* trace-element and isotope analyses on minerals are especially useful for characterization of geological materials (e.g., Zack et al., 2002 ; Villaseca et al., 2003 ; Kabashima et al., 2003 ; Cox et al., 2003 ; Tiepolo et al., 2003). The LA-ICP-MS analysis has been usually conducted on thick sections (e.g., Grégoire et al., 2003 ; Hinchey et al., 2003). Analysis on thin section of minerals and rocks is strongly required in order to combine with petrographical characteristics under the microscope. This will greatly en-

hance the scientific merit of the result of LA-ICP-MS analysis. We try to explore optimistic conditions for *in-situ* quantitative trace-element analysis of geological materials on thin section by a LA-ICP-MS equipment installed at the Incubation Business Laboratory Center of Kanazawa University in FY 2002.

LA-ICP-MS instrumentation

The analysis was performed by a quadrupole ICP-MS (Agilent 7500s by Yokogawa Analytical Systems, Japan) equipped with a laser-ablation microprobe (MicroLas : GeoLas Q-Plus by MicroLas, Germany) (Fig. 1).

The GeoLas Q-Plus uses an argon fluoride gas mixture to produce 193 nm laser light and is equipped with a homogenizing, imaging optical system. The ablating spot size ranges from 4 to 160 μm, depending on the size of the aperture used. Due to the homogeneous illumination of the aperture, the energy density on the sample surface is constant at all beam sizes, leading to a flat top beam onto the sample surface. The fluency on the sample surface is changed by the discharge voltage of the laser (28 kV, approximately 60-150 mJ) and by using a beam splitter. This results in energy on the sample up to 35 J/cm^2.

The ablation cell now in use allows using a normal thin section (2.8 cm x 4.8 cm) with two potentially internal standard glasses (e.g., NIST SRM 612 and 614, which are

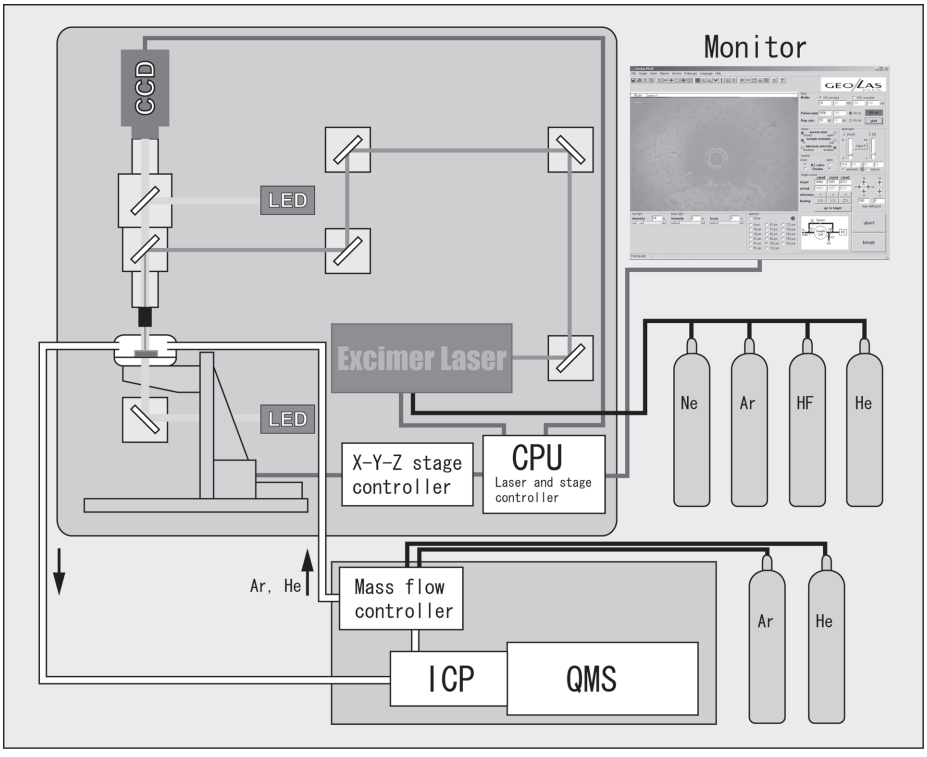

Fig.1 Schematic diagram of the LA-ICP-MS system.

synthetic calcium-, sodium, aluminosilicate glass doped with a range of elements at nominal concentrations of 50 ppm and 1 ppm, respectively) to be loaded and analyzed in a single uninterrupted session. We can move the sample at an interval of 1μm by X-Y-Z stage controller in the cell. Incorporation of a high-quality CCD camera into the laser system allows use of transmitted-and reflected-light optics to find points to be analyzed. The ablation process can be viewed using a LCD monitor incorporated into the system. The samples used in LA-ICP-MS analysis are polished well on the surface irrespective of their thickness.

Experiments and Discussion

3D shape of laser ablation hole

The 3D shape of laser ablation hole was examined in detail on glass chip with 6 mm thickness. The holes were made on the glass by 500 and 1000 pulses of laser shot (10 Hz and beam of 100 μm across) with different energies from 6 to 12 J/cm^2. The holes were cut vertically through the center and were observed under the microscope (Fig. 2).

In the case of the laser shot with energy of 6 J/cm^2 the diameter of horizontal section of the hole tends to diminish downward (Fig. 2). In contrast to this the hole slightly increases its diameter downward in the case of the laser shot with energy of 12 J/cm^2 (Fig. 2). The horizontal section is almost constant in size in the holes made by the other laser shots (8 or 10 J/cm^2).

The relationship between the depth of holes and the number of laser pulse is shown in Fig. 3. A linear relationship can be obtained by using the laser with 6 J/cm^2, possibly indicating that the degree of progress of sampling from the surface is almost constant with time of laser ablation. The increase of the hole depth is less accelerated with an increase of energy of laser shot with the other energies (Fig. 3), suggesting that the amount of sample evaporated from the surface is not so effectively increasing with a further increase of energy of laser. The sampling depth per one pulse in 500 laser pulses is 0.15, 0.20, 0.21 and 0.23 μm for the energy of laser of 6, 8, 10 and 12 J/cm^2, respectively. As the ordinary thin section has a thickness around 30 μm, less than 150 to 200 laser pulses will be necessary for sampling from solid materials that have similar physical properties (especially absorption) as glass.

The sampling as precise as possible for location on thin section will be indispensable for *in-situ* analysis of minerals that may have heterogeneity and are involved in formation of complicated textures. Eggins et al. (1998a) refer to the downward tapering of the hole with an increase of pulses by using an excimer laser as in our system. In the present study the hole keeps the horizontal shape even after 1000 pulses of an excimer laser with energy of 8 or 10 J/cm^2. Combined with the constant amount of sampling with time at the condition, the sampling with an excimer laser with energy of 8 or 10 J/cm^2 is appropriate for *in-situ* analysis of minerals on thin section.

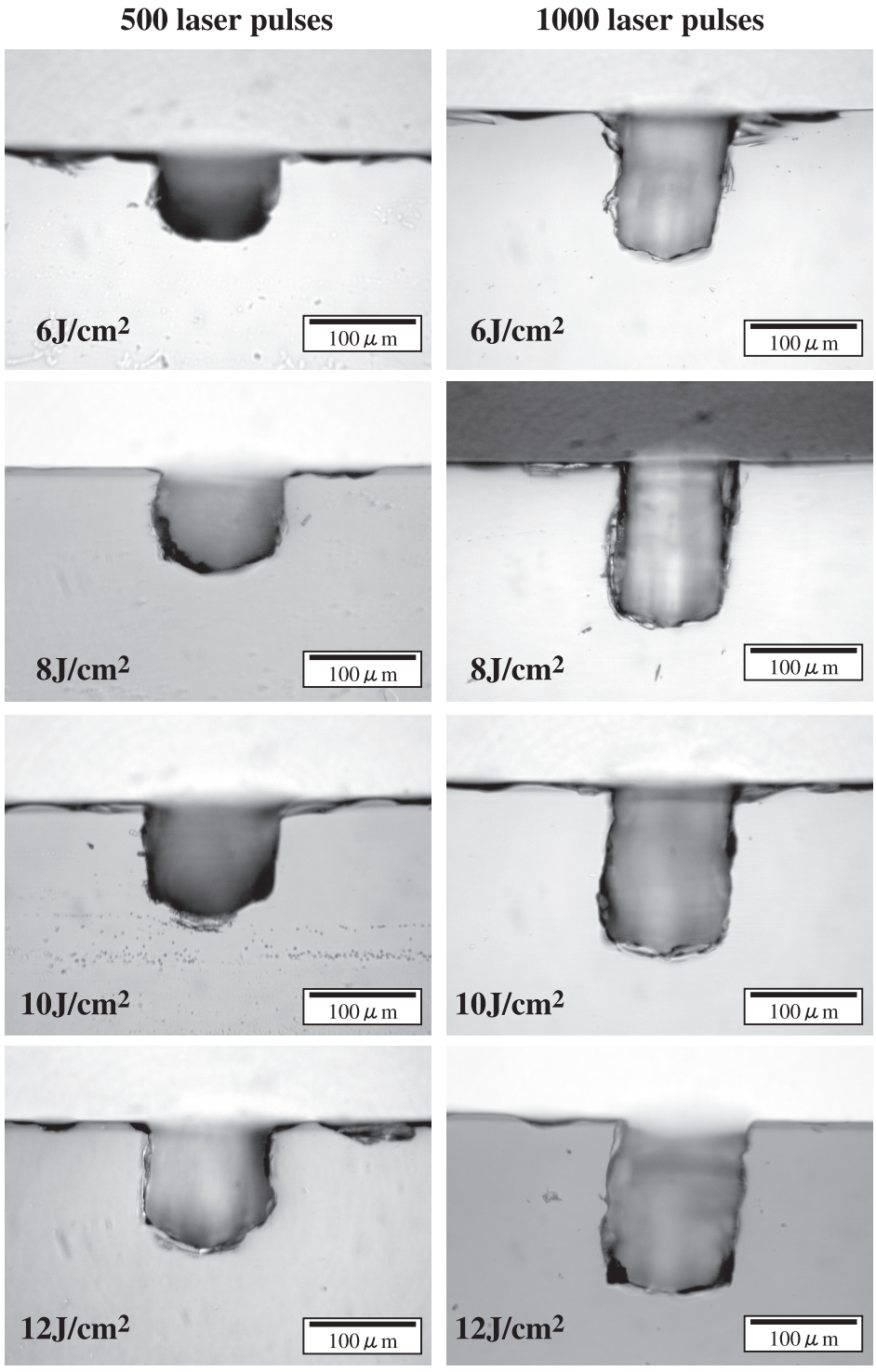

Fig.2 Cross sections of the holes made by laser shots (500 and 1000 laser pulses) on the glass surface.

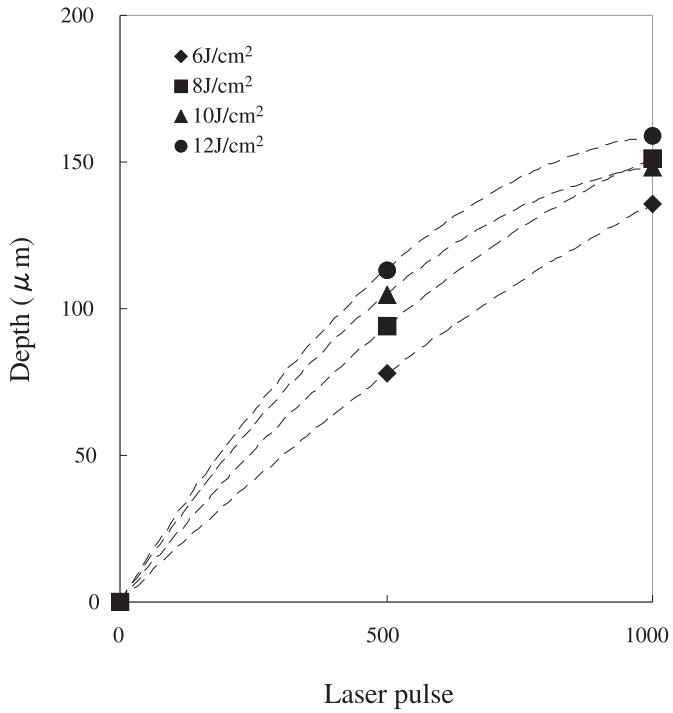

Fig.3 Relationships between the hole depth by laser shot and the number of laser pulse on the glass surface depending on the energy of laser (from 6 to 12 J/cm^2). Note the linear relationship at lower laser energy.

Carrier gas as an agency of laser ablation sampling

Ar gas has been usually adopted as a carrier of sample for LA-ICP-MS analysis. He gas has been also used as a carrier in recent experiments (e.g., Cabri et al., 2003 ; Kosler et al., 2003). We can control the carrier gas through the mass-flow controller of ICP-MS, and introduce the sample prepared by the laser ablation apparatus to the ICP torch (Fig. 1). We used both Ar gas of 99.995% purity and He gas of 99.995 % purity for comparison. The manner of sampling was checked on the slide glass for ordinary thin section making for both kinds of gas. The hole and surroundings were observed under the microscope after 150 or 1000 laser pulses (Fig. 4). The sensitivity was compared on standard glass samples, NIST SRM 612 and 614, through trace-element analysis using different kinds of carrier gas, Ar and He. We have examined the differences of the sensitivity of analysis and the manner of sampling depending on the species of carrier gas adopted.

Some amount of powdery materials is deposited around the hole made by laser shot (Fig. 4). The deposits are more prominent in using Ar gas as a sample carrier than in using He gas (Fig. 4), and increase in amount with an increase of number of laser pulses (Fig. 4). Using Ar as a carrier gas, ring-like thin deposits are observed around the hole after 150 la-

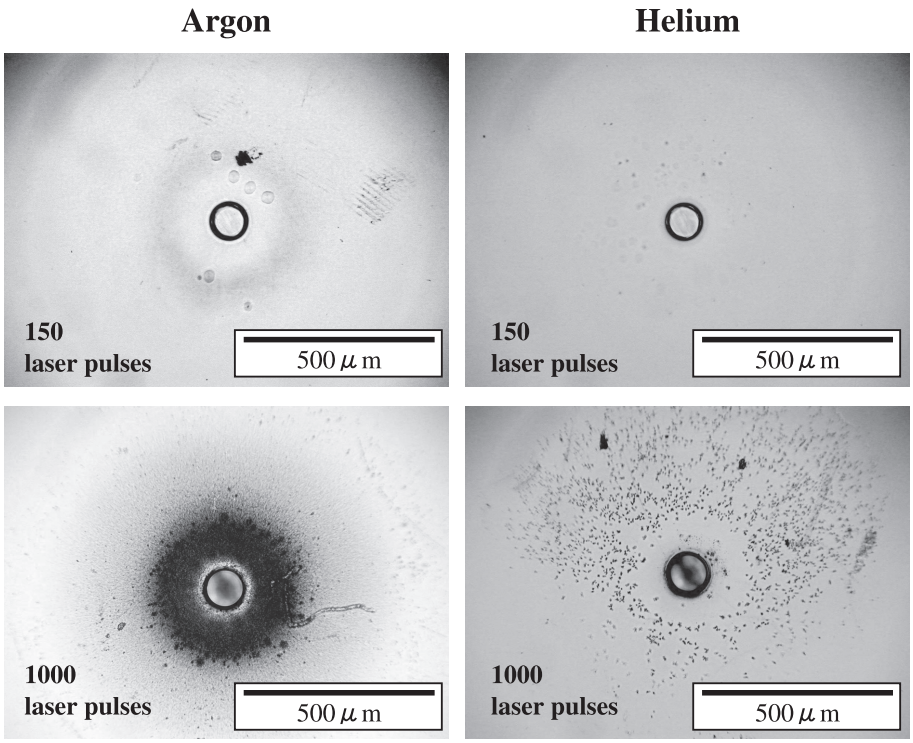

Fig.4 Plan views of the holes made by laser shots on the glass surface using different carrier gases. Note the smaller amount of powdery material deposition around the hole by using He than by using Ar.

Table 1 Operating parameters of LA-ICP-MS.

ICP	
Forward power	1200 W
Reflected power	1 W
Carrier gas flow(Ar)	1.16 l/min^{-1}
Carrier gas flow(He)	0.20 l/min^{-1}
Auxiliary gas flow	1.0 l/min^{-1}
Plasma gas flow	15 l/min^{-1}
Interface	
Sample aperture diameter	1.0 mm
Skimmer aperture diameter	0.4 mm
Cone material	Pt
Mass spectrometer	
Sampling distance	6.3 mm
Dwell time	10∽30 ms
Laser	
Excimer ArF wavelength	193 nm
Repetition rate	5 Hz
Pulse energy	8 J/cm^2

ser pulses, and substantially increase after 1000 laser pulses (Fig. 4). By using He gas as a carrier, in contrast, practically no deposit is observed around the hole after 150 laser pulses, and particles of around 1 μm in diameter are only sparsely deposited after 1000 laser pulses. This indicates that He gas works much more efficiently as a sample carrier than Ar.

The sensitivity was enhanced and the detection limit was reduced by using He gas instead of Ar gas. This means He gas is much more appropriate for a sample carrier than Ar gas as suggested by Eggins et al. (1998b). Analytical conditions of the present laser ablation ICP-

MS system are listed in Table 1.

Relationship between the hole size by laser ablation and the sensitivity of the ICM-MS system

We examined the relationship between the size of laser-ablation hole and the sensitivity of analysis in conducting *in-situ* simultaneous quantitative LA-ICP-MS analysis of 37 elements including rare earth elements (REEs). Data were collected by peak hopping, using dwell times of 10-30 ms per mass. Total analysis time was 150 seconds per spot including backgrounds and washout of the sample prior to the next analysis. The samples are the standard glasses of NIST SRM 612 and 614. The size of laser-ablation hole varies from 10 to 150 μm. He gas was adopted as a sample carrier as concluded above.

Optimizing the ICP-MS is usually carried out using a signal obtained from the ablation of NIST SRM 612 glass using the laser rastering procedure rather than a hole ablation to facilitate long duration analysis of time invariant signal intensities. Instrument sensitivity scales with mass ablation rate was tuned to give 5,000 cps/ppm for ^{7}Li, 12,000 cps/ppm for ^{89}Y and 8,000 cps/ppm for ^{209}Bi when ablating a 70 μm circular spot at a laser pulse repetition rate of 5 Hz with energy on sample surface of 8 J/cm^2. In this study, typically ^{248}ThO/^{232}Th was maintained below 0.5 %.

Calibration requires that the background corrected signal from all of an ablation of a sample as shown below. Background signals are obtained from measurement of a gas blank for approximately 60 s prior to initiating ablation. Gas blank was typically 300 cps for B, 110 cps for Cr and Li, 90 cps for Sc, 30 cps for V, 150 cps for Rb, 100 cps for Cs, 40 cps for Pb, and < 6 cps for other elements. Data reduction followed a protocol essentially identical to that outlined by Longerich et al. (1996). Previous works have indicated that ablation rate with excimer system is relatively matrix-insensitive amongst the NIST SRM 612 and natural minerals (hornblende, augite and garnet) (Günther et al., 1997). Günther et al. (1997) showed that compositions of natural minerals, calibrated against NIST SRM 612 using a major element as an internal standard, agree well with independent data obtained by another method despite the very considerable difference in matrix between the

Table 2 Major element compositions of glasses were determined with microprobe.

	NIST SRM 614 Concentration Average (n=22) (wt%)	1 σ
SiO_2	71.83	0.44
Al_2O_3	1.95	0.03
CaO	11.71	0.08
Na_2O	13.78	0.08
total	99.27	0.48

Table 3 Quantitative trace element analyses of NIST SRM 614 glass disc.

		Concentration Average (n=6)		Detection limit Average (n=6)	Sensitivity Average (n=6)	Kurosawa et al. (2002)
	Mass	(μg g^{-1})	1σ	(μg g^{-1})	(cps/μg g^{-1})	(μg g^{-1})
Li	7	1.85	0.04	0.33	1300	1.69
B	11	2.00	0.09	1.65	230	4.83
Al	27	512000	5405	90	30	n.d.
Si	29	34000000	0	75400	0	n.d.
Ca	42	84000	565	150	30	84300
Sc	45	1.28	0.02	0.20	3300	1.53
Ti	49	3.3	0.12	2.1	180	3.37
V	51	0.99	0.03	0.22	3600	1.00
Cr	53	N.D.		5.1	300	1.23
Co	59	0.76	0.02	0.08	3000	0.68
Ni	60	1.18	0.04	0.20	630	1.04
Rb	85	0.88	0.02	0.18	4600	0.87
Sr	88	44.4	0.48	0.03	5800	45.0
Y	89	0.76	0.01	0.01	5700	0.79
Zr	90	0.76	0.02	0.02	2900	0.77
Nb	93	0.73	0.01	0.01	5500	0.78
Cs	133	0.68	0.02	0.13	6700	0.59
Ba	138	3.11	0.05	0.02	5000	3.15
La	139	0.69	0.01	0.01	6300	0.75
Ce	140	0.79	0.02	0.01	6300	0.78
Pr	141	0.75	0.01	0.01	7200	0.76
Nd	146	0.74	0.02	0.06	1100	0.77
Sm	147	0.74	0.02	0.07	950	0.79
Eu	151	0.74	0.02	0.03	3200	0.78
Gd	158	0.72	0.02	0.04	1400	0.80
Tb	159	0.69	0.02	0.02	5700	0.76
Dy	163	0.72	0.02	0.06	1300	0.83
Ho	165	0.71	0.02	0.02	5100	0.81
Er	166	0.70	0.02	0.04	1700	0.81
Tm	169	0.70	0.01	0.02	5100	0.80
Yb	172	0.76	0.03	0.09	1100	0.84
Lu	175	0.71	0.02	0.02	4500	0.80
Hf	178	0.65	0.02	0.06	1300	0.74
Ta	181	0.78	0.02	0.03	3900	0.83
Pb	208	2.89	0.15	0.08	1800	2.07
Th	232	0.71	0.03	0.04	3200	0.83
U	238	0.82	0.03	0.03	3500	0.80

N.D. : Not Detected
n.d. : not determine

NIST SRM standard glasses and the samples (Jackson et al., 1992 ; Fedorowich et al., 1995 ; Ludden et al., 1995 ; Norman et al., 1996, 1998 ; Günther et al., 1997 ; Eggins et al., 1998a). In this study, the external calibration sample was the NIST SRM 612 reference material and ^{29}Si was based on SiO_2 content obtained by a JEOL JXA-8800 microprobe at the Cooperative Center of Kanazawa University (Table 2). The analysis was performed under an accelerating voltage of 15 kV and a beam current of 15 nA using 30 μm diameter

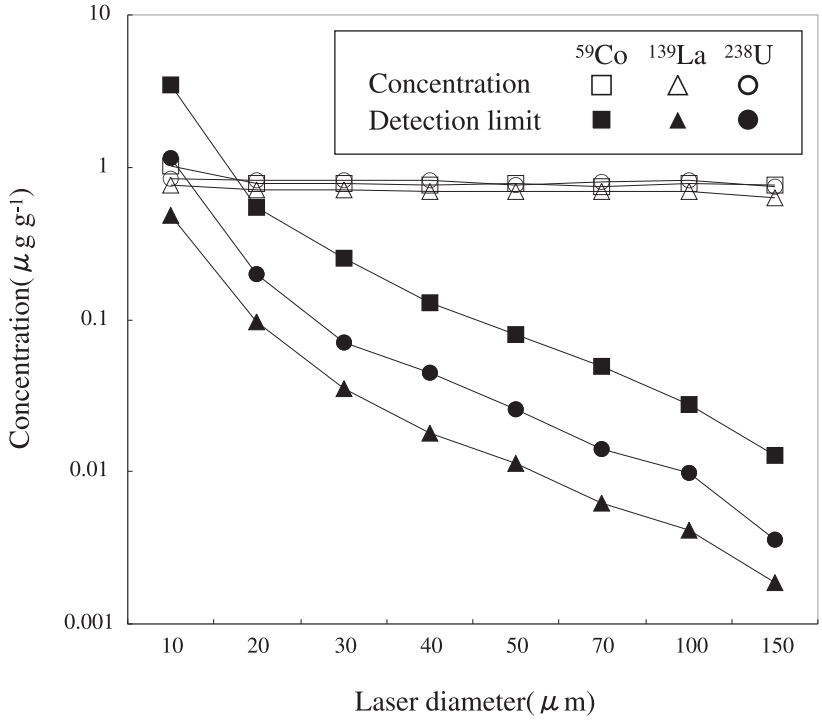

Fig.5 Variations of concentrations and detection limits for ^{59}Co, ^{139}La and ^{238}U with different laser diameters. Note that both the concentration and detection limit are sufficient for quantitative analysis at the laser diameter≧30μm. See text.

beam. All X-ray peaks were counted for 20 seconds. JEOL software using ZAF corrections was employed. The trace element concentrations for the calibration were selected from the preferred values of Pearce et al. (1997).

Figure 5 illustrates the relationships between the laser beam diameter as represented by the hole diameter, concentrations of three masses of element (^{59}Co, ^{139}La and ^{238}U) and their detection limits. The detection limits clearly increase with a decrease of laser beam diameter, especially at < 20 μm (Fig. 5). If we use the laser beam diameter of 10 μm the detection limit for ^{59}Co is apparently higher than its nominal concentration (Fig. 5). It is notable that the detection limits are sufficient and that the calculated concentrations are stable for quantitative analysis if we use laser beam diameter≧30μm. A dataset for the standard glass NIST SRM 614 obtained by the present technique at the condition (laser diameter of 50 μm, 5 Hz and 8 J/cm^2) is listed on Table 3 as an example. This result is almost consistent with the previous study (e.g., Kurosawa et al. 2002) except for B (boron) (Table 3). In this study, the B content is close to the detection limit. A further work is thus required to determine the B content precisely.

Summary and Conclusions

We can make sufficient sampling from minerals on thin section by laser of 8 J/cm^2 and 5 Hz in our LA-ICP-MS analysis. The sampling depth increases by 0.20 μm/pulse. The maximum duration for sampling from thin section with a thickness of 30 μm (= ordinary thin section) is therefore about 30 seconds in our analysis. He gas is more appropriate for a sample carrier than Ar gas because the background will be diminished and the sensitivity will be enhanced more for the former. The diameter of laser beam can be as small as 30 μm to obtain sufficiently good dataset for trace-element concentrations of minerals from thin section.

Acknowledgements

We wish to acknowledge the support from the Incubation Business Laboratory Center of Kanazawa University. We are grateful to Mike Shelley, Steve Eggins and Charlotte Allen (ANU) for technical advice, to Takafumi Hirata (Tokyo Institute of Technology) for encouragement. The LA-ICP-MS system was installed in the course of research by the 21st -Century COE project "Environmental Monitoring and Prediction of Long-and Short-Term Dynamics of Pan-Japan Sea Area : Construction of Monitoring Network and Assessment of Human Effects" led by Prof. K. Hayakawa, Kanazawa University. We express our deepest appreciation to Prof. K. Hayakawa for his leadership.

References

Cabri, L.J., Sylvester, P.J., Tubrett, M.N., Peregoedova, A. and Laflamme, J. H. G. (2003). Comparison of LAM-ICP-MS and micro-pixe results for palladium and rhodium in selected samples of Noril'sk and Talnakh sulfides. The Canadian Mineralogist, v.41, p.321-329

Cox, R.A. and Wilton, D.H.C. (2003). Laser-ablation U-Th-Pb *In situ* dating of zircon and allanite : an example from the October harbour granite, central coastal Labrador, Canada. The Canadian Mineralogist, v.41, p.273-291

Eggins, S.M., Kinsley, L.P.J. and Shelley, J.M.G. (1998a). Deposition and element fractionation processes during atmospheric pressure laser sampling for analysis by ICP-MS. Applied Surface Science, v.127-129, p.278-286.

----------, Rudnick, R.L. and McDonough, W.F. (1998b). The composition of peridotites and their minerals : a laser-ablation ICP-MS study. Earth and Planetary Science Letters, v.154, p.53-71.

Fedorowich, J.S., Jain, J.C. and Kerrich, R. (1995). Trace-element analysis of garnet by laser-ablation microprobe ICP-MS. The Canadian Mineralogist, v.33, p.469-480.

Grégoire, M., Bell, D.R. and Le Roex, A.P. (2003). Garnet lherzolite from the Kaapvaal Craton (South Africa) : Trace element evidence for a metasomatic history. Journal of Petrology, v.44(4), p.629-657.

Günther, D., Frischknechet, R., Heinrich, C.A. and Kahlert, H-J. (1997). Capabilities of an Argon Fluo-

ride 193 nm excimer laser for laser ablation inductively coupled plasma mass spectrometry microanalysis of geological materials. Journal of Analytical Atomic Spectrometry, v.12, p.939-944.

Hinchey, J.G., Wilton, D.H.C. and Tubrett, M.N. (2003). A LAM-ICP-MS study of the distribution of gold in arsenopyrite from the lodestar prospect, Newfoundland, Canada. The Canadian Mineralogist, v.41, p.353-364

Jackson, S.E., Longerich, H.P., Dunning, G.R. and Fryer, B.J. (1992). The application of laser-ablation microprobe-inductively coupled plasma-mass spectrometry (LAM-ICP-MS) to *in situ* trace-element determinations in minerals. The Canadian Mineralogist, v.30, p.1049-1064.

Kabashima, T., Isozaki, Y., Hirata, T., Maruyama, S., Kiminami, K. and Nishimura, Y. (2003). U-Pb zircon ages by laser ablation ICP-MS technique from the Archean felsic intrusive and volcanics in the North Pole Area, Western Australia. Journal of Geography, v.112(1), p.1-17

Kosler, J., Simonetti, A., Sylvester, P.J., Cox, R.A., Tubrett, M.N. and Wilton, D.H.C. (2003). Laser-ablation ICP-MS measurements of Re/Os in molybdenite and implications for Re-Os geochronology. The Canadian Mineralogist, v.41, p.307-320

Kurosawa, M., Jackson, S.E. and Sueno, S. (2002). Trace element analysis of NIST SRM 614 and 616 glass reference materials by laser ablation microprobe-inductively coupled plasma-mass spectrometry. Geostandards Newsletter : The Journal of Geostandards and Geoanalysis, v.26, p.75-84

Longerich, H.P., Jackson, S.E. and Günther, D. (1996). Laser ablation inductively coupled plasma mass spectrometric transient signal data acquisition and analyte concentration calculation. Journal of Analytical Atomic Spectrometry, v.11, p.899-904.

Ludden, J.N., Feng, R., Gauthier, G. and Stix, J. (1995) Applications of LAM-ICP-MS analysis to minerals. The Canadian Mineralogist, v.33, p.419-434.

Norman, M.D., Pearson, N.J., Sharma, A. and Griffin, W.L. (1996).Quantitative analysis of trace elements in geological materials by laser ablation ICP-MS : instrumental operating conditions and calibration values of NIST glasses. Geostandards Newsletter. The Journal of Geostandards and Geoanalysis, v.20, p.247-261.

----------, Griffin, W.L., Pearson, N.J., Garcia, M.O. and O'Reilly, S.Y. (1999).Quantitative analysis of trace element abundances in glasses and minerals : a comparison of laser ablation inductively coupled plasma mass spectrometry, solution inductively coupled plasma mass spectrometry, proton microprobe and electron microprobe data. Journal of Analytical Atomic Spectrometry, v.13, p.477-482.

Pearce., N.J.G, Perkins, W.T., Westgate, J.A., Gorton, M.P., Jackson, S.E., Neal, C.R. and Chenery, S.P. (1997). A compilation of new and published major and trace element data for NIST SRM 610 and NIST SRM 612 glass reference materials. Geostandards Newsletter : The Journal of Geostandards and Geoanalysis, v.21, p.115-144.

Tiepolo, M., Bottazzi, P. and Palenzona, M. (2003). A laser probe coupled with ICP-double-focusing sector-field mass spectrometer for in situ analysis of geological samples and U-Pb dating of Zircon. The Canadian Mineralogist, v.41, p.259-272

Villaseca, C., Martín Romera, C., De la Rosa, J. and Barbero, L. (2003). Residence and redistribution of REE, Y, Zr, Th and U during granulite-facies metamorphism : behavior of accessory and major phases in peraluminous granulites of central Spain. Chemical Geology , v.200, p.293-323.

Zack, T., Kronz, A., Foley, S. F. and Rivers, T. (2002). Trace element abundance in rutiles from eclogites and associated garnet mica schists. Chemical Geology, v.184, p.97-122.